What Is Big, Gray, and Lives in California?

Find the volume of each prism. Write the letter of the exercise in the box above the answer at the bottom of the page.

A

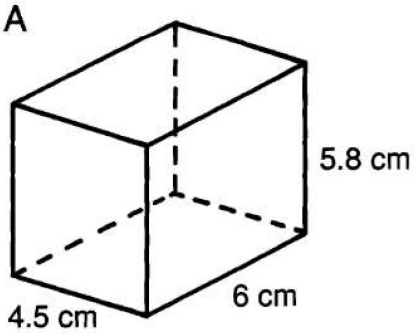

T

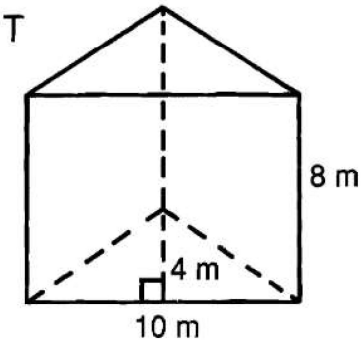

N

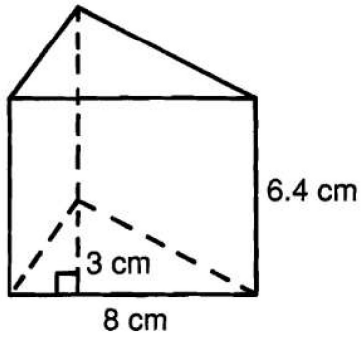

A

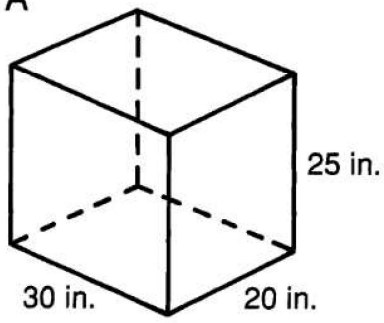

P

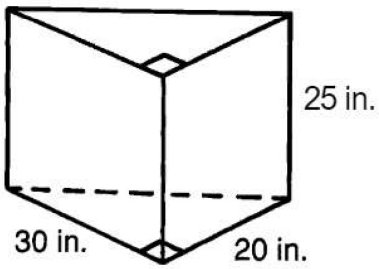

A

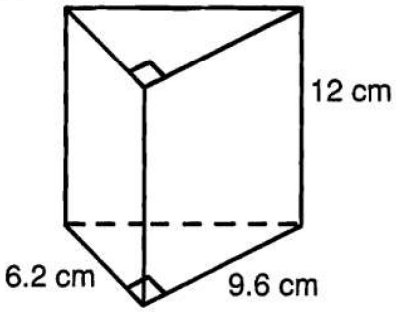

N

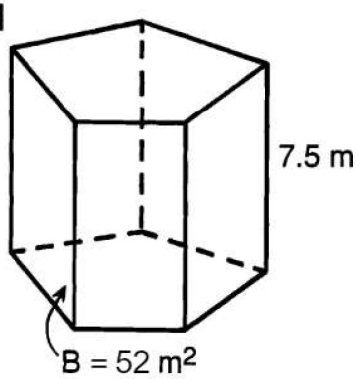

L

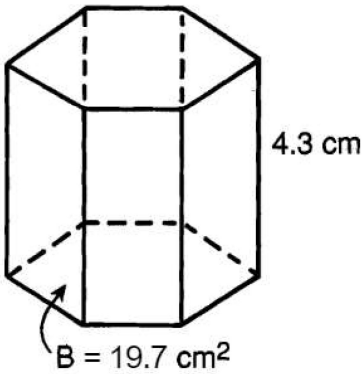

H

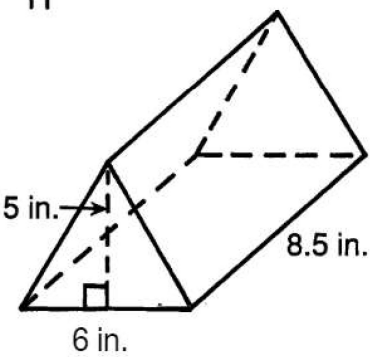

83.8 cm3	357.12 cm3	76.8 cm3	8,800 in.3	92.31 cm3	84.71 cm3	156.6 cm3	114.5 in.3	364.5 m3	7,500 in.3	127.5 in.3	15,000 in.3	390 m3	160 m3	349.22 cm3

© Creative Publications